INSTALLATION INSTRUCTIONS

PLEASE READ CAREFULLY BEFORE INSTALLING FIXTURE
Save these instructions, as you may need them at a later date.

canolight
Canadian Brightness

LED STEP LIGHT
CL-STEP2-V-5CCT
AC/DC 12-24V

Power:3W CRI90 IP65
5CCT(2.7K-3K-3.5K-4K-5K)

GENERAL: All electrical connections must be in accordance with local and National Electrical Code (N.E.C.) standards. If you are unfamiliar with proper electrical wiring connections, contact and obtain the services of a qualified electrician. Use UL or IEC approved wire only for input/output connections.

Remove fixture and mounting components from the box, and make sure that no parts are missing, by referencing the illustration in the illustration instructions.

DIMMING: *This product is compatible with most common residential type dimmers. Dimming performance will depend upon dimmer, dimmer settings (dimmers with adjustments to brightness range), wiring method, and number of LED modules. For best results, set dimmer position at maximum before adjusting to a lower light level.*

Turn power off before installation, inspection, or removal.
Use all necessary precautions while performing this procedure.

Consult a qualified electrician to ensure correct branch circuit conductor. Min 90°C supply conductors.

Properly ground electrical enclosure. IT IS IMPERATIVE THAT THE OUTLET BOX BE PROPERLY GROUNDED.

DO NOT REVERSE THE HOT AND NEUTRAL CONNECTIONS, OTHERWISE SAFETY WILL BE COMPROMISED.

This Integrated LED Fixture has no lamp/bulb to replace.

MAKE SURE THAT YOU SELECT RIGHT CCT BEFORE YOU PUT ON THE COVER, IT IS DIFFICULT TO OPEN THE FACE COVER ONCE YOU FIX IT

DON'T SUBMERGE THE LIGHT BODY INTO WATER INSTALL IT IN AREA WITH HIGH SALTY MOISTURE OR CORROSIVE ENVIROMENT WILL LEAD TO FAST CORROSION SINCE IT IS NOT DESIGN FOR THIS PURPOSE

TROUBLESHOOTING

- Check that line voltage at fixture is correct.
- Ensure that there is voltage at lamp fixture wires. If there is no voltage, then check all connections.
- Check that fixture is grounded properly.

If fixture does not light:

- Check switch to ensure that there are no defects.
- Check fuse/circuit breaker for trips, then check wiring connections.

PRODUCT CARE
After Sales Service

1. Please discontinue to use product right away if product shows any visible defect and contact customer service.

2.If there is any problem with our lights for non-human reasons, please contact customer service, we will send you brand new replacement without need to returning goods or full refund.

3.If you are not completely satisfied with product after installation but prefer not to disassemble, contact with us right away, we will provide comparable compensations.

www.canolight.ca

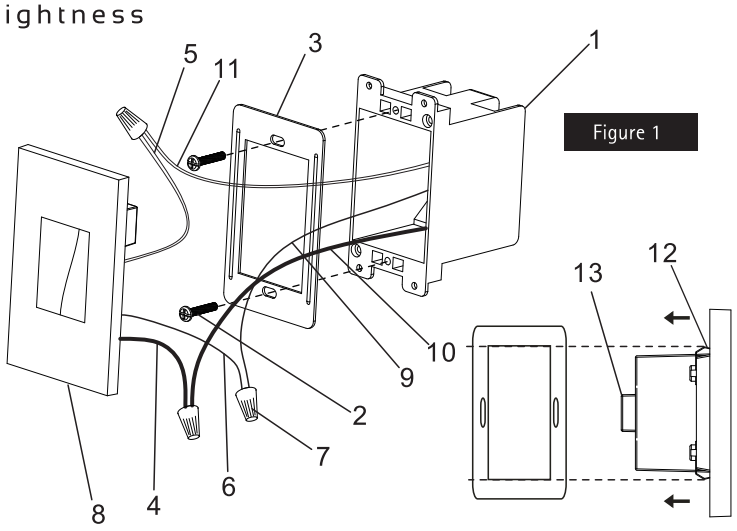

Figure 1

Figure 2

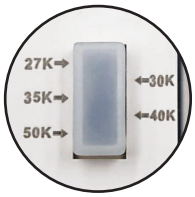

1.OUTLET BOX (EXCLUDED)
2. FIXTURE SCREWS
3. MOUNTING BRACKET
4. BLACK FIXTURE WIRE
5. WHITE FIXTURE WIRE
6. FIXTURE GROUND WIRE
7. WIRE NUTS
8. LIGHT BODY INTERGRATED WITH FACE COVER
9. HOUSE GROUND WIRE
10. LIVE WIRE
11.NEUTRAL WIRE
12. SPRING CLIP
13. 5CCT SWITCH
14. WASHER

Please follow these steps for installation.

1.Fix the Mounting Bracket(3) to the OUTLET BOX(1) with attached FIXTURE SCREW(2)

2.Pull the supply wires out from the OUTLET BOX(1), Identify the live wire,neutral wire and ground wire(if you have problem to figure it out, please consult a qualified electrician before you do wiring),then Connect the LIVE WIRE (10 with BLACK WIRE(4), NEUTRAL WIRE (11) with WHITE WIRE(5), and GROUND WIRE(9) with GROUND WIRE(6) with the WIRE NUTS (7) attached, Please make sure that all the wires are firm connection,then seal wire nuts with with silicone to ensure a stable performance in long term.

3. Select the CCT from 2700K/3000K/3500K/4000K/5000K by pushing the toggle switch left or right See Figure 2 .
WARNING: Check the CCT in this stage by turning on switch,once you confirm the light color, turn off switch. After installation, it maybe a problem to remove the LIGHT BODY(8) to change CCT since the connection between LIGHT BODY(8) and MOUNTING BRACKET is firm,it may destroy the SPRING CLIP(12),eventually, you can't attach it to the MOUNTING BRACKET(3) again.

4. Check the MOUNTING BRACKET(3) is fixed flat on OUTLET BOX(1)'s surface, press the SPRING CLIP(12) evenly into the MOUNTING BRACKET(3) until all clips have a good connection with MOUNTING BRACKET(3)'s edge.

This device complies with Part 15 of the FCC Rules.
Operation is subject to the following two conditions: (1) this device may not cause harmful interference, and (2) this device must accept any interference received, including interference that may cause undesired operation.