CL-Pendant Zoey

POWER	**10W**
COLOR TEMP	**3000K** **4000K** Special order: 2700K/3500K/5000K
BEAM ANGLE	**Diffused**
OUTPUT LUMEN	**368lm** (Black, Gold Inside) **498lm** (White, White Inside) (Black, White Inside)
FINISH COLOR	Sandy Black, Gold Inside Sandy Black, White Inside Sandy White, White Inside

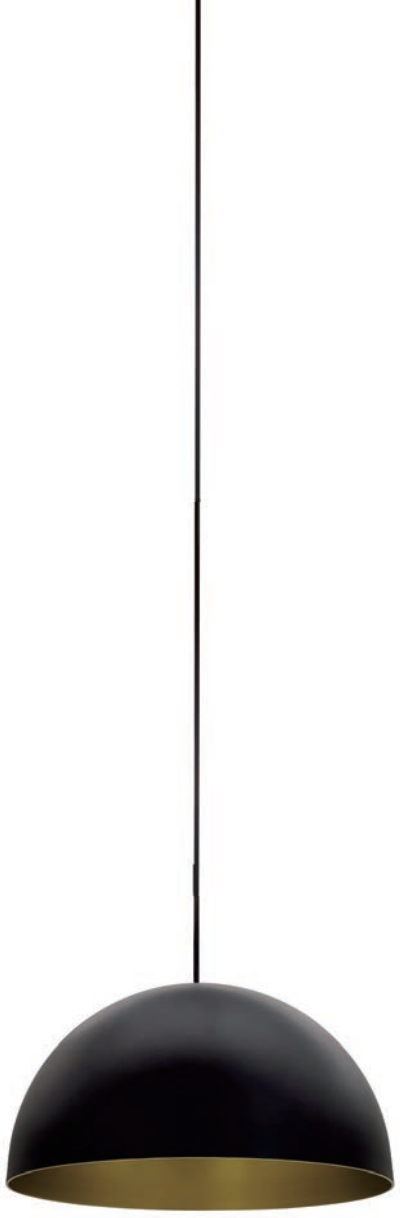

LIGHT DISTRIBUTION

3000K 90Ra

Diffused

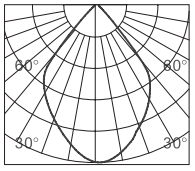

h(m)	E(lx)	Φ(m)
1	298	Φ1.63
2	75	Φ3.27
3	33	Φ4.90
4	19	Φ6.54
5	12	Φ8.18

DC24V INPUT | DIMMABLE | IP20 | SDCM <3 | CRI >90 | CE | RoHS | Intertek | 5 YEAR WARRANTY

CL-Pendant Zoey

STANDARD

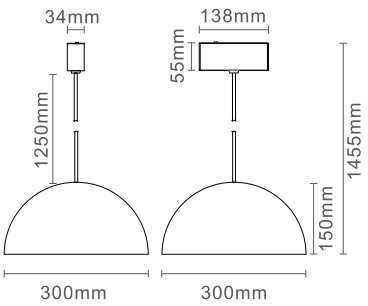

CL-Pendant Zoey-D9

CURVY

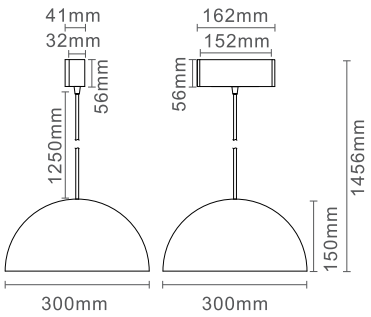

CL-Pendant Zoey-ULS

ULTRA SLIM

