CL-Pendant Global

POWER	**5W**
COLOR TEMP	**3000K** **4000K** Special order: 2700K/3500K/5000K
BEAM ANGLE	**Diffused**
OUTPUT LUMEN	**350lm**
FINISH COLOR	Sandy Black Sandy White Special order: Gold Black Bronze



LIGHT DISTRIBUTION

3000K 90Ra

Diffused

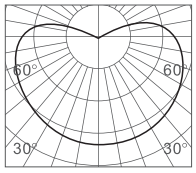

h(m)	E(lx)	Φ(m)
1	30	Φ2.00
2	7	Φ4.00
3	3	Φ6.00
4	1.9	Φ8.00
5	1.2	Φ10.00

DC24V INPUT | DIMMABLE | IP20 | SDCM <3 | CRI >90 | CE | RoHS | ETL Intertek | 5 YEAR WARRANTY

CL-Pendant-Global

STANDARD

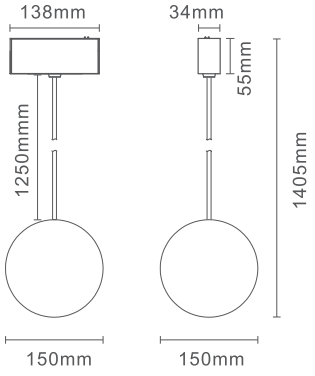

CL-Pendant-Global-D9

CURVY

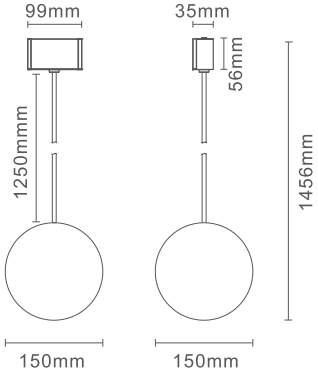

CL-Pendant-Global-ULS

ULTRA SLIM

