CL-Halo-L16

DC24V INPUT | DIMMABLE | IP20 | SDCM <3 | CRI >90 | CE | RoHS | Intertek | 5 YEAR WARRANTY

POWER	**18W**
COLOR TEMP	**3000K** **4000K** Special order: 2700K/3500K/5000K
BEAM ANGLE	**Diffused**
OUTPUT LUMEN	**686lm**
FINISH COLOR	Sandy Black, Sandy White Special order: Gold, Black Bronze



LIGHT DISTRIBUTION

3000K 90Ra

Diffused

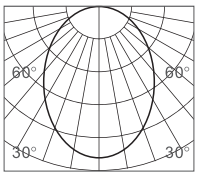

h(m)	E(lx)	Φ(m)
1	270	Φ2.41
2	67	Φ4.83
3	30	Φ7.25
4	16	Φ9.66
5	10	Φ12.08



CL-Halo-L16

STANDARD

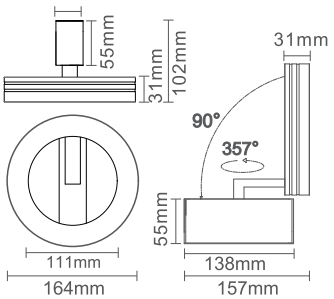



CL-Halo-L16-D9

CURVY

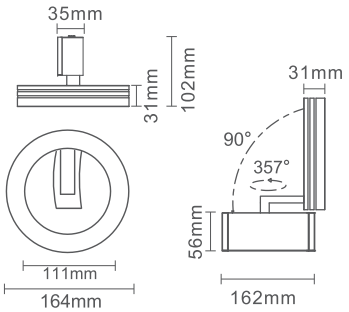



CL-Halo-L16-ULS

ULTRA SLIM

