CL-Halo-D18

DC24V INPUT | DIMMABLE | IP20 | SDCM <3 | CRI >90 | CE | RoHS | Intertek | 5 YEAR WARRANTY

POWER	**18W**
COLOR TEMP	**3000K** **4000K** Special order: 2700K/3500K/5000K
BEAM ANGLE	**34°** Special order: 20° / 48°
OUTPUT LUMEN	**1562lm**
FINISH COLOR	Sandy Black Sandy White Special order: Gold Black Bronze



LIGHT DISTRIBUTION

3000K 90Ra

34°

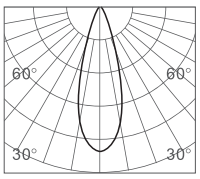

h(m)	E(lx)	Φ(m)
1	4407	Φ0.57
2	1102	Φ1.14
3	489	Φ1.71
4	275	Φ2.28
5	176	Φ2.85

20°

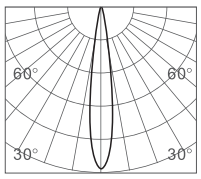

h(m)	E(lx)	Φ(m)
1	7669	Φ0.39
2	1917	Φ0.78
3	852	Φ1.17
4	479	Φ1.57
5	306	Φ1.96

48°

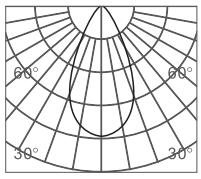

h(m)	E(lx)	Φ(m)
1	2316	Φ0.83
2	579	Φ1.66
3	257	Φ2.49
4	144	Φ3.32
5	92	Φ4.15



CL-Halo-D18

STANDARD

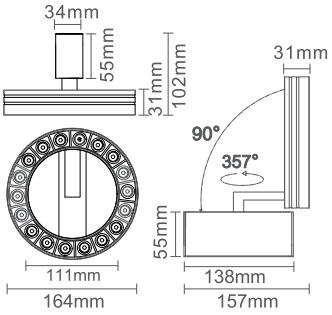



CL-Halo-D18-D9

CURVY

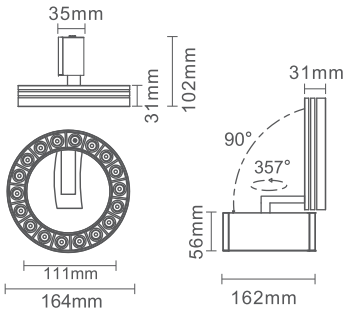



CL-Halo-D18-ULS

ULTRA SLIM

